TATUNG

Squirrel Cage 3-Phase Induction Motor

TS21FNV-II SERIES (Standard Series & High Thrust Series)

Vertical Solid Shaft P - Base Mounted
3-Phase / 60Hz / 2300V-11000V
Frame Size N5009 - N8810 (NEMA / IMPERIAL)
TEFC FIN FRAME CONSTRUCTION

NEMA STANDARD

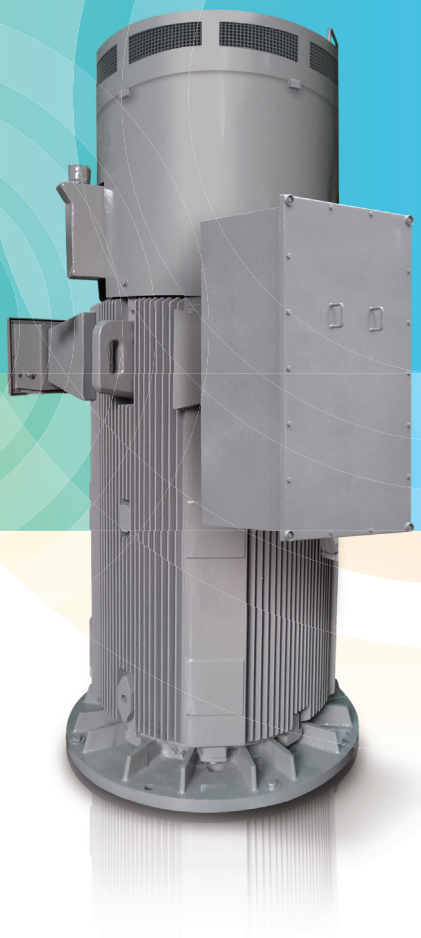

ISO 9001 BUREAU VERITAS Certification

SYSTEM CERTIFICATION OHSAS 18001 SGS

SYSTEM CERTIFICATION ISO14001:2004 SGS

STANDARD SPECIFICATIONS

- **Output** : 200HP-2500HP
- **Poles** : 4P-10P
- **Frame size** : N5009-N8810 (NEMA / IMPERIAL)
- **Voltage** : 2300V-11000V
- **Frequency** : 60Hz
- **Enclosure** : Totally Enclosed Fan Cooled (TEFC)
- **Mounting** : Vertical Flange Mounted ("P" base)
- **Insulation** : Class F
- **Temperature rise** : Class B at S.F. 1.0 / Class F at S.F. 1.15 (By Resistance Method)
- **Environment** : Ambient Temperature 40°C or less
- **Altitude** : 3300 feet (1000 meters) or less
- **Thrust capability** : For high thrust series, maximum allowable thrust based on 5 years L-10 bearing life. Thrust loads not available for standard series.

PREMIUM FEATURES

- **Optimized Cast Iron Fin Frame**
  Optimum fin design ensures efficient heat exchange.
- **Reliable Rotor Construction**
  Compact design and precise balancing provide reliable operation. Improved arrangement of ventilation path inside rotor greatly increases cooling efficiency.
- **Durable Bearing Construction**
  Proper bearing selection and bearing life calculation ensure lasting operation. Extra high thrust and long bearing life is available on request.
- **Large Size Terminal Box**
  Large size terminal box made of high-grade cast iron or steel plate provides ample space and tough enclosure for cable connection.
- **V.P.I. Stator Winding**
  For medium and high voltage motors, stator winding with V.P.I. treatment meets class F insulation and gives high resistance to corona.
- **Low Noise Construction**
  Low noise construction meets or exceeds NEMA MG 1 standard. Low noise level is available upon request.

PERFORMANCE DATA

MEDIUM VOLTAGE MOTOR
TEFC, Vertical Flange Mounted
3 Phase, 60Hz, 2300V, S.F. 1.0
Class F Insulation, 40℃ Ambient, Continuous Duty

OUTPUT HP	FULL LOAD RPM	FRAME SIZE	CURRENT		TORQUE			EFFICIENCY			POWER FACTOR			Maximum Down Thrust[3] (lb)
			FULL LOAD (A)	LOCKED ROTOR (A)	FULL LOAD (lb-ft)	LOCKED ROTOR (%)	BREAK DOWN (%)	FULL LOAD (%)	3/4 LOAD (%)	1/2 LOAD (%)	FULL LOAD (%)	3/4 LOAD (%)	1/2 LOAD (%)	
200	1775	N5009	46.7	300	597	100	200	95.0	94.5	93.0	84.5	82.5	76.0	12600
	1180	N5009	48.1	285	898	90	200	95.0	94.5	93.0	82.0	78.0	69.0	14600
	885	N5009	49.9	270	1198	80	200	95.0	95.0	93.5	79.0	75.0	66.0	16200
	705	N5810	52.5	260	1503	80	200	94.5	94.5	93.0	75.5	70.5	60.0	15800
250	1775	N5009	58.0	375	746	100	200	95.0	94.5	93.0	85.0	83.0	76.5	12500
	1180	N5009	60.1	360	1123	90	200	95.0	94.5	93.0	82.0	78.0	69.0	14600
	885	N5009	61.6	335	1497	80	200	95.0	95.0	93.5	80.0	75.0	66.0	16200
	705	N5810	64.8	320	1879	80	200	94.5	94.5	93.5	76.5	72.0	62.0	15700
300	1775	N5009	69.6	450	896	100	200	95.0	94.5	93.0	85.0	83.0	76.5	12400
	1180	N5009	72.1	430	1347	90	200	95.0	94.5	93.0	82.0	78.0	69.0	14400
	885	N5810	73.9	405	1797	80	200	95.0	95.0	93.5	80.0	75.0	66.0	14200
	706	N5810	77.2	385	2252	80	200	94.5	94.5	93.5	77.0	72.5	62.5	15500
350	1775	N5009	81.2	530	1045	100	200	95.0	94.5	93.0	85.0	83.0	76.5	12400
	1180	N5810	83.6	500	1572	90	200	95.0	94.5	93.0	82.5	78.5	70.0	12400
	885	N5810	85.7	470	2096	80	200	95.0	95.0	93.5	80.5	76.0	66.5	14000
	706	N6310	88.5	440	2627	80	200	95.0	95.0	94.0	78.0	73.5	63.5	14800
400	1775	N5810	92.2	595	1194	100	200	95.0	94.5	93.0	85.5	83.5	77.0	10300
	1182	N5810	95.6	570	1793	90	200	95.0	94.5	93.0	82.5	78.5	70.0	12300
	886	N5810	97.9	535	2393	80	200	95.0	95.0	93.5	80.5	76.5	67.0	13800
	706	N6310	101	500	3003	80	200	95.0	95.0	94.0	78.0	73.5	63.5	14800
450	1775	N5810	104	670	1344	100	200	95.0	94.5	93.0	85.5	83.5	77.0	10100
	1182	N5810	107	640	2018	90	200	95.0	95.0	93.5	83.0	80.0	72.0	12100
	888	N5810	110	600	2686	80	200	95.0	95.0	93.5	81.0	77.5	68.5	13700
	706	N6310	114	565	3378	80	200	95.0	95.0	94.0	78.0	73.5	63.5	14700
500	1780	N5810	115	745	1489	100	200	95.0	94.5	93.0	85.5	83.5	77.0	9700
	1182	N5810	119	710	2242	90	200	95.0	95.0	93.5	83.0	80.0	72.0	11700
	888	N6310	121	665	2984	80	200	95.2	95.0	94.0	81.0	77.5	68.5	13300
	708	N6310	125	625	3743	80	200	95.2	95.0	94.0	78.5	74.0	64.0	14600
600	1780	N5810	137	890	1786	100	200	95.2	95.0	93.5	86.0	84.5	79.5	9400
	1182	N5810	141	845	2690	90	200	95.2	95.0	94.0	83.5	80.5	72.0	11400
	888	N6310	146	800	3581	80	200	95.2	95.0	94.0	81.0	77.5	68.5	13100
	708	N6810	149	745	4491	80	200	95.2	95.0	94.5	79.0	74.5	64.5	14000
700	1782	N5810	160	1030	2082	90	200	95.5	95.2	94.0	86.0	84.5	79.0	9200
	1185	N6310	162	970	3131	90	200	95.5	95.5	94.5	84.5	83.0	76.0	11500
	890	N6810	168	920	4168	80	200	95.5	95.5	94.5	81.7	78.0	69.0	12600
	710	N7808	172	855	5225	80	200	95.5	95.5	95.0	80.0	76.0	67.0	17000
800	1782	N6310	181	1170	2379	90	200	95.5	95.2	94.0	86.5	85.0	80.0	9400
	1185	N6310	185	1110	3578	90	200	95.6	95.6	94.5	84.5	83.0	76.0	11400
	890	N6810	192	1050	4764	80	200	95.5	95.5	94.5	81.7	78.0	69.0	12400
	710	N7808	196	980	5972	80	200	95.5	95.5	95.0	80.0	76.0	67.0	16800
900	1782	N6310	204	1320	2677	90	200	95.6	95.2	94.0	86.5	85.0	80.5	9300
	1188	N6310	208	1250	4015	90	200	95.7	95.5	94.5	84.5	82.5	76.0	10700
	892	N6810	215	1180	5347	80	200	95.5	95.5	94.5	82.0	78.5	70.0	15000
	710	N7808	221	1100	6718	80	200	95.5	95.5	95.0	80.0	77.0	68.0	16600
1000	1785	N6310	225	1460	2969	90	200	95.7	95.5	94.5	87.0	85.5	80.5	8400
	1188	N6810	230	1380	4461	90	200	95.7	95.5	94.5	85.0	83.0	76.5	10400
	892	N7808	237	1300	5941	80	200	95.6	95.6	94.6	82.5	79.0	70.5	14600
	712	N7808	243	1210	7443	80	200	95.6	95.6	94.6	80.5	77.5	69.5	16300

M152315

PERFORMANCE DATA

MEDIUM VOLTAGE MOTOR
TEFC, Vertical Flange Mounted
3 Phase, 60Hz, 2300V, S.F. 1.0
Class F Insulation, 40℃ Ambient, Continuous Duty

OUTPUT HP	FULL LOAD RPM	FRAME SIZE	CURRENT		TORQUE			EFFICIENCY			POWER FACTOR			Maximum Down Thrust[3] (lb)
			FULL LOAD (A)	LOCKED ROTOR (A)	FULL LOAD (lb-ft)	LOCKED ROTOR (%)	BREAK DOWN (%)	FULL LOAD (%)	3/4 LOAD (%)	1/2 LOAD (%)	FULL LOAD (%)	3/4 LOAD (%)	1/2 LOAD (%)	
1250	1785	N6810	279	1810	3711	80	200	95.8	95.5	94.5	87.5	86.5	82.0	8100
	1190	N7808	284	1700	5567	80	200	95.8	95.8	94.8	86.0	84.5	79.5	12400
	892	N7808	296	1620	7427	80	200	95.8	95.6	94.6	82.5	79.5	72.0	25600
	712	N8810	301	1500	9304	80	200	96.0	96.0	95.0	81.0	78.0	70.0	28100
1500	1786	N6810	333	2150	4451	80	200	96.0	95.8	94.8	88.0	87.0	82.5	7800
	1190	N7808	340	2040	6680	80	200	96.0	96.0	95.0	86.0	84.5	79.5	11900
	892	N8810	354	1940	8912	70	200	96.2	96.0	95.0	82.5	79.5	72.0	24800
	712	N8810	361	1800	11165	80	200	96.0	96.0	95.0	81.0	78.0	70.0	27200
1750	1786	N7808	383	2480	5193	80	200	96.2	96.0	95.0	89.0	88.5	85.0	[4]
	1192	N8810	391	2340	7781	80	200	96.3	96.0	95.0	87.0	85.5	80.5	21600
	892	N8810	410	2250	10397	70	200	96.3	96.0	95.0	83.0	80.0	72.5	24500
2000	1788	N7808	436	2830	5928	80	200	96.5	96.2	95.2	89.0	88.5	85.0	[4]
	1192	N8810	446	2670	8892	80	200	96.5	96.3	95.0	87.0	85.5	80.5	20800
2250	1788	N8810	488	3160	6669	70	200	96.5	96.2	95.2	89.5	89.0	86.0	[4]
2500	1788	N8810	539	3500	7410	70	200	96.5	96.2	95.2	90.0	89.5	86.5	[4]

M152315

Note: 1. Above data are typical values and for reference only.
2. Test method: Performace test per IEEE standard 112 method F1
3. Only for high thrust motors. The allowable maximum down thrust is based on 5 years L-10 bearing life.
4. High thrust motor is available on request.
5. Non-reverse ratchet mechanism is available on request for high thrust motors.

ALL DATA ARE SUBJECT TO CHANGE WITHOUT PRIOR NOTICE.

PERFORMANCE DATA

MEDIUM VOLTAGE MOTOR
TEFC, Vertical Flange Mounted
3 Phase, 60Hz, 4160V, S.F. 1.0
Class F Insulation, 40°C Ambient, Continuous Duty

OUTPUT HP	FULL LOAD RPM	FRAME SIZE	CURRENT		TORQUE			EFFICIENCY			POWER FACTOR			Maximum Down Thrust[3] (lb)
			FULL LOAD (A)	LOCKED ROTOR (A)	FULL LOAD (lb-ft)	LOCKED ROTOR (%)	BREAK DOWN (%)	FULL LOAD (%)	3/4 LOAD (%)	1/2 LOAD (%)	FULL LOAD (%)	3/4 LOAD (%)	1/2 LOAD (%)	
200	1775	N5009	25.8	167	597	100	200	95.0	94.5	93.0	84.5	82.5	76.0	12600
	1180	N5009	26.6	160	898	90	200	95.0	94.5	93.0	82.0	78.0	69.0	14600
	885	N5009	27.6	150	1198	80	200	95.0	95.0	93.5	79.0	75.0	66.0	16200
	705	N5810	29.0	145	1503	80	200	94.5	94.5	93.0	75.5	70.5	60.0	15800
250	1775	N5009	32.1	208	746	100	200	95.0	94.5	93.0	85.0	83.0	76.5	12500
	1180	N5009	33.2	200	1123	90	200	95.0	94.5	93.0	82.0	78.0	69.0	14600
	885	N5009	34.1	185	1497	80	200	95.0	95.0	93.5	80.0	75.0	66.0	16200
	705	N5810	35.8	178	1879	80	200	94.5	94.5	93.5	76.5	72.0	62.0	15700
300	1775	N5009	38.5	250	896	100	200	95.0	94.5	93.0	85.0	83.0	76.5	12400
	1180	N5009	39.9	235	1347	90	200	95.0	94.5	93.0	82.0	78.0	69.0	14400
	885	N5810	40.9	225	1797	80	200	95.0	95.0	93.5	80.0	75.0	66.0	14200
	706	N5810	42.7	210	2252	80	200	94.5	94.5	93.5	77.0	72.5	62.5	15500
350	1775	N5009	44.9	290	1045	100	200	95.0	94.5	93.0	85.0	83.0	76.5	12400
	1180	N5810	46.2	275	1572	90	200	95.0	94.5	93.0	82.5	78.5	70.0	12400
	885	N5810	47.4	260	2096	80	200	95.0	95.0	93.5	80.5	76.0	66.5	14000
	706	N6310	48.9	245	2627	80	200	95.0	95.0	94.0	78.0	73.5	63.5	14800
400	1775	N5810	51.0	330	1194	100	200	95.0	94.5	93.0	85.5	83.5	77.0	10300
	1182	N5810	52.8	315	1793	90	200	95.0	94.5	93.0	82.5	78.5	70.0	12300
	886	N5810	54.2	295	2393	80	200	95.0	95.0	93.5	80.5	76.5	67.0	13800
	706	N6310	55.9	275	3003	80	200	95.0	95.0	94.0	78.0	73.5	63.5	14800
450	1775	N5810	57.4	370	1344	100	200	95.0	94.5	93.0	85.5	83.5	77.0	10100
	1182	N5810	59.1	350	2018	90	200	95.0	95.0	93.5	83.0	80.0	72.0	12100
	888	N5810	60.5	330	2686	80	200	95.0	95.0	93.5	81.0	77.5	68.5	13700
	706	N6310	62.9	310	3378	80	200	95.0	95.0	94.0	78.0	73.5	63.5	14700
500	1780	N5810	63.7	410	1489	100	200	95.0	94.5	93.0	85.5	83.5	77.0	9700
	1182	N5810	65.7	390	2242	90	200	95.0	95.0	93.5	83.0	80.0	72.0	11700
	888	N6310	67.1	365	2984	80	200	95.2	95.0	94.0	81.0	77.5	68.5	13300
	708	N6310	69.3	345	3743	80	200	95.2	95.0	94.0	78.5	74.0	64.0	14600
600	1780	N5810	75.9	490	1786	100	200	95.2	95.0	93.5	86.0	84.5	79.5	9400
	1182	N5810	78.1	465	2690	90	200	95.2	95.0	94.0	83.5	80.5	72.0	11400
	888	N6310	80.6	440	3581	80	200	95.2	95.0	94.0	81.0	77.5	68.5	13100
	708	N6810	82.6	410	4491	80	200	95.2	95.0	94.5	79.0	74.5	64.5	14000
700	1782	N5810	88.2	570	2082	90	200	95.5	95.2	94.0	86.0	84.5	79.0	9200
	1185	N6310	89.8	535	3131	90	200	95.5	95.5	94.5	84.5	83.0	76.0	11500
	890	N6810	92.9	510	4168	80	200	95.5	95.5	94.5	81.7	78.0	69.0	12600
	710	N7808	94.9	470	5225	80	200	95.5	95.5	95.0	80.0	76.0	67.0	17000
800	1782	N6310	100	650	2379	90	200	95.5	95.2	94.0	86.5	85.0	80.0	9400
	1185	N6310	103	615	3578	90	200	95.6	95.6	94.5	84.5	83.0	76.0	11400
	890	N6810	106	580	4764	80	200	95.5	95.5	94.5	81.7	78.0	69.0	12400
	710	N7808	108	540	5972	80	200	95.5	95.5	95.0	80.0	76.0	67.0	16800
900	1782	N6310	113	730	2677	90	200	95.6	95.2	94.0	86.5	85.0	80.5	9300
	1188	N6310	115	690	4015	90	200	95.7	95.5	94.5	84.5	82.5	76.0	10700
	892	N6810	119	650	5347	80	200	95.5	95.5	94.5	82.0	78.5	70.0	15000
	710	N7808	122	605	6718	80	200	95.5	95.5	95.0	80.0	77.0	68.0	16600
1000	1785	N6310	124	805	2969	90	200	95.7	95.5	94.5	87.0	85.5	80.5	8400
	1188	N6810	127	760	4461	90	200	95.7	95.5	94.5	85.0	83.0	76.5	10400
	892	N7808	131	720	5941	80	200	95.6	95.6	94.6	82.5	79.0	70.5	14600
	712	N7808	135	670	7443	80	200	95.6	95.6	94.6	80.5	77.5	69.5	16300

M152315

PERFORMANCE DATA

MEDIUM VOLTAGE MOTOR
TEFC, Vertical Flange Mounted
3 Phase, 60Hz, 4160V, S.F. 1.0
Class F Insulation, 40℃ Ambient, Continuous Duty

OUTPUT HP	FULL LOAD RPM	FRAME SIZE	CURRENT		TORQUE			EFFICIENCY			POWER FACTOR			Maximum Down Thrust[3] (lb)
			FULL LOAD (A)	LOCKED ROTOR (A)	FULL LOAD (lb-ft)	LOCKED ROTOR (%)	BREAK DOWN (%)	FULL LOAD (%)	3/4 LOAD (%)	1/2 LOAD (%)	FULL LOAD (%)	3/4 LOAD (%)	1/2 LOAD (%)	
1250	1785	N6810	154	1000	3711	80	200	95.8	95.5	94.5	87.5	85.0	80.0	8100
	1190	N7808	157	940	5567	80	200	95.8	95.8	94.8	86.0	84.5	79.5	12400
	892	N7808	164	900	7427	80	200	95.8	95.6	94.6	82.5	79.5	72.0	25600
	712	N8810	166	830	9304	80	200	96.0	96.0	95.0	81.0	78.0	70.0	28100
1500	1786	N6810	184	1195	4451	80	200	96.0	95.8	94.8	88.0	86.0	81.0	7800
	1190	N7808	188	1125	6680	80	200	96.0	96.0	95.0	86.0	84.5	79.5	11900
	892	N8810	196	1075	8912	70	200	96.2	96.0	95.0	82.5	79.5	72.0	24800
	712	N8810	200	995	11165	80	200	96.0	96.0	95.0	81.0	78.0	70.0	27200
1750	1786	N7808	213	1380	5193	80	200	96.2	96.0	95.0	88.5	86.5	81.5	(4)
	1192	N8810	216	1295	7781	80	200	96.3	96.0	95.0	87.0	85.5	80.5	21600
	892	N8810	227	1245	10397	70	200	96.3	96.0	95.0	83.0	80.0	72.5	24500
2000	1788	N7808	241	1565	5928	80	200	96.5	96.2	95.2	89.0	87.0	82.0	(4)
	1192	N8810	247	1475	8892	80	200	96.5	96.3	95.0	87.0	85.5	80.5	20800
2250	1788	N8810	271	1760	6669	70	200	96.5	96.2	95.2	89.0	87.0	82.0	(4)
2500	1788	N8810	301	1955	7410	70	200	96.5	96.2	95.2	89.0	87.0	82.0	(4)

M152315

Note: 1. Above data are typical values and for reference only.
2. Test method: Performace test per IEEE standard 112 method F1
3. Only for high thrust motors. The allowable maximum down thrust is based on 5 years L-10 bearing life.
4. High thrust motor is available on request.
5. Non-reverse ratchet mechanism is available on request for high thrust motors.

ALL DATA ARE SUBJECT TO CHANGE WITHOUT PRIOR NOTICE.

PERFORMANCE DATA

HIGH VOLTAGE MOTOR
TEFC, Vertical Flange Mounted
3 Phase, 60Hz, 6600V, S.F. 1.0
Class F Insulation, 40℃ Ambient, Continuous Duty

OUTPUT HP	FULL LOAD RPM	FRAME SIZE	CURRENT		TORQUE			EFFICIENCY			POWER FACTOR			Maximum Down Thrust[3] (lb)
			FULL LOAD (A)	LOCKED ROTOR (A)	FULL LOAD (lb-ft)	LOCKED ROTOR (%)	BREAK DOWN (%)	FULL LOAD (%)	3/4 LOAD (%)	1/2 LOAD (%)	FULL LOAD (%)	3/4 LOAD (%)	1/2 LOAD (%)	
200	1775	N5009	16.5	105	597	100	200	93.8	93.5	92.5	84.5	82.5	76.5	12600
	1180	N5009	17.4	105	898	90	200	93.5	93.0	92.0	80.0	75.5	66.0	14600
	885	N5810	17.7	95	1198	80	200	93.5	93.5	92.5	79.0	74.5	65.0	14500
	705	N5810	18.5	90	1503	80	200	93.5	93.5	92.5	75.5	69.0	58.0	15800
250	1775	N5009	20.5	130	746	100	200	93.8	93.5	92.5	85.0	83.0	77.0	12500
	1180	N5009	21.8	130	1123	90	200	93.5	93.2	92.0	80.0	75.5	66.0	14600
	885	N5810	21.9	120	1497	80	200	93.5	93.5	92.5	79.5	75.0	65.5	14400
	705	N5810	23.0	115	1879	80	200	93.5	93.5	92.5	76.0	69.5	58.0	15700
300	1775	N5009	24.5	155	896	100	200	94.2	94.0	92.8	85.0	83.0	77.0	12400
	1180	N5810	25.4	150	1347	90	200	94.0	93.8	92.0	82.0	77.5	67.5	12600
	885	N5810	26.0	140	1797	80	200	94.0	94.0	93.0	80.0	75.5	66.0	14200
	706	N5810	27.5	135	2252	80	200	93.8	93.8	92.8	76.0	69.5	58.0	15300
350	1775	N5810	28.3	180	1045	100	200	94.5	94.3	93.0	85.5	83.5	77.5	10400
	1180	N5810	29.4	175	1572	90	200	94.3	94.0	92.5	82.5	79.0	71.0	12400
	885	N5810	30.1	165	2096	80	200	94.2	94.2	93.2	80.5	76.0	66.5	14000
	706	N6310	31.3	155	2627	80	200	94.2	94.2	93.2	77.5	73.0	63.0	15100
400	1775	N5810	32.1	205	1194	100	200	94.6	94.4	93.0	86.0	84.0	78.0	10200
	1182	N5810	33.2	195	1793	90	200	94.5	94.2	93.0	83.2	80.2	72.5	12300
	886	N5810	34.3	185	2393	80	200	94.5	94.5	93.5	80.5	76.5	67.0	13500
	706	N6310	35.4	175	3003	80	200	94.5	94.5	93.5	78.0	73.5	63.5	14800
450	1775	N5810	36.0	230	1344	100	200	94.8	94.6	93.2	86.0	84.0	78.0	10100
	1182	N5810	37.2	220	2018	90	200	94.8	94.5	93.5	83.2	80.2	72.5	12100
	888	N6310	38.4	210	2686	80	200	94.5	94.2	93.2	81.0	77.0	68.0	13400
	706	N6310	39.6	195	3378	80	200	94.5	94.5	93.5	78.5	74.0	64.0	14700
500	1780	N5810	40.0	260	1489	100	200	94.8	94.6	93.0	86.0	84.0	78.5	9900
	1182	N5810	41.4	245	2242	90	200	94.8	94.5	93.5	83.2	80.2	72.5	11900
	888	N6310	42.5	230	2984	80	200	94.8	94.5	93.5	81.0	77.0	68.0	13300
	708	N6810	43.9	215	3743	80	200	94.6	94.6	93.5	78.5	74.5	64.5	14600
600	1780	N5810	47.5	305	1786	100	200	95.2	95.0	93.5	86.5	84.5	79.0	9400
	1182	N6310	49.0	290	2690	90	200	95.2	95.2	94.3	84.0	82.5	77.0	11500
	888	N6310	50.8	275	3581	80	200	95.1	94.7	93.7	81.0	77.5	69.0	12700
	708	N6810	52.4	260	4491	80	200	94.6	94.6	93.5	79.0	75.0	65.0	17200
700	1782	N6310	55.0	355	2082	90	200	95.5	95.2	94.0	87.0	85.5	79.5	9400
	1185	N6310	56.6	335	3131	90	200	95.5	95.5	94.5	84.5	83.0	77.5	11000
	890	N6810	58.7	320	4168	80	200	95.5	95.5	94.5	81.5	78.0	69.0	15400
	710	N7808	60.2	300	5225	80	200	95.5	95.5	95.0	79.5	76.5	67.5	17000
800	1782	N6310	62.8	405	2379	90	200	95.5	95.2	94.0	87.0	85.5	79.5	8800
	1185	N6310	64.6	385	3578	90	200	95.6	95.6	94.5	84.5	83.0	77.5	10800
	890	N6810	67.1	365	4764	80	200	95.5	95.5	94.5	81.5	78.0	69.0	15200
	710	N7808	68.3	340	5972	80	200	95.5	95.5	95.0	80.0	77.0	68.0	16800
900	1782	N6310	70.6	455	2677	90	200	95.6	95.2	94.0	87.0	85.5	79.5	8700
	1188	N6810	72.2	430	4015	90	200	95.7	95.5	94.5	85.0	83.5	78.0	13100
	892	N7808	75.0	410	5347	80	200	95.5	95.5	94.5	82.0	78.5	70.5	15000
	710	N7808	76.4	380	6718	80	200	95.5	95.5	95.0	80.5	77.5	68.5	29600
1000	1785	N6810	78.4	505	2969	90	200	95.7	95.5	94.5	87.0	85.5	80.0	8400
	1188	N6810	80.2	480	4461	90	200	95.7	95.5	94.5	85.0	83.5	78.0	12700
	892	N7808	83.2	455	5941	80	200	95.6	95.6	94.6	82.0	78.5	70.5	14600
	712	N8810	84.8	420	7443	80	200	95.6	95.6	94.6	80.5	78.0	70.5	28800

M152315

PERFORMANCE DATA

HIGH VOLTAGE MOTOR
TEFC, Vertical Flange Mounted
3 Phase, 60Hz, 6600V, S.F. 1.0
Class F Insulation, 40℃ Ambient, Continuous Duty

OUTPUT HP	FULL LOAD RPM	FRAME SIZE	CURRENT		TORQUE			EFFICIENCY			POWER FACTOR			Maximum Down Thrust[3] (lb)
			FULL LOAD (A)	LOCKED ROTOR (A)	FULL LOAD (lb-ft)	LOCKED ROTOR (%)	BREAK DOWN (%)	FULL LOAD (%)	3/4 LOAD (%)	1/2 LOAD (%)	FULL LOAD (%)	3/4 LOAD (%)	1/2 LOAD (%)	
1250	1785	N6810	97.3	630	3711	80	200	95.8	95.5	94.5	87.5	85.0	80.0	8100
	1190	N7808	99.0	590	5567	80	200	95.8	95.8	94.8	86.0	84.5	79.5	22700
	892	N8810	103	560	7427	80	200	95.8	95.6	94.6	83.0	80.0	72.5	25600
	712	N8810	105	520	9304	80	200	96.0	96.0	95.0	81.0	78.5	71.0	28100
1500	1786	N7808	116	750	4451	80	200	96.0	95.8	94.8	88.0	87.0	83.0	(4)
	1190	N7808	119	710	6680	80	200	96.0	96.0	95.0	86.0	84.5	79.5	21900
	892	N8810	123	675	8912	70	200	96.0	96.0	95.0	83.0	80.0	72.5	24800
1750	1786	N7808	134	870	5193	80	200	96.2	96.0	95.0	88.5	87.5	83.5	(4)
	1192	N8810	136	815	7781	80	200	96.3	96.0	95.0	87.0	85.5	80.5	21600
2000	1788	N8810	152	985	5928	80	200	96.5	96.2	95.2	89.0	88.0	85.0	(4)
	1192	N8810	155	930	8892	80	200	96.5	96.3	95.0	87.0	85.5	80.5	21300
2250	1788	N8810	170	1100	6669	70	200	96.5	96.2	95.2	89.5	88.5	85.5	(4)

M152315

Note: 1. Above data are typical values and for reference only.
2. Test method: Performace test per IEEE standard 112 method F1
3. Only for high thrust motors. The allowable maximum down thrust is based on 5 years L-10 bearing life.
4. High thrust motor is available on request.
5. Non-reverse ratchet mechanism is available on request for high thrust motors.

ALL DATA ARE SUBJECT TO CHANGE WITHOUT PRIOR NOTICE.

PERFORMANCE DATA

HIGH VOLTAGE MOTOR
TEFC, Vertical Flange Mounted
3 Phase, 60Hz, 11000V, S.F. 1.0
Class F Insulation, 40℃ Ambient, Continuous Duty

OUTPUT HP	FULL LOAD RPM	FRAME SIZE	CURRENT		TORQUE			EFFICIENCY			POWER FACTOR			Maximum Down Thrust[3] (lb)
			FULL LOAD (A)	LOCKED ROTOR (A)	FULL LOAD (lb-ft)	LOCKED ROTOR (%)	BREAK DOWN (%)	FULL LOAD (%)	3/4 LOAD (%)	1/2 LOAD (%)	FULL LOAD (%)	3/4 LOAD (%)	1/2 LOAD (%)	
450	706	N6810	24.5	120	3378	80	200	94.5	94.5	93.5	76.0	71.0	60.5	14700
500	708	N6810	27.3	135	3743	80	200	94.5	94.5	93.0	76.0	71.0	60.5	14600
600	1780	N6310	28.9	187	1786	100	200	95.2	95.0	93.5	85.5	83.5	77.0	9500
	1182	N6310	29.4	175	2690	90	200	95.2	95.2	94.0	84.0	81.5	74.0	11100
	888	N6810	30.9	170	3581	80	200	95.0	94.8	93.8	80.0	76.0	67.5	12700
	708	N7808	31.8	158	4491	80	200	94.8	94.8	94.0	78.0	74.5	65.5	17200
700	1782	N6310	33.6	218	2082	90	200	95.5	95.2	94.0	85.5	83.5	77.0	9000
	1185	N6810	33.8	200	3131	90	200	95.5	95.5	94.5	85.0	83.0	75.0	11000
	890	N6810	35.7	195	4168	80	200	95.5	95.0	94.0	80.5	76.5	68.0	12500
	710	N7808	36.8	182	5225	80	200	95.0	95.0	94.5	78.5	75.0	66.0	17000
800	1782	N6810	38.1	248	2379	90	200	95.5	95.2	94.0	86.0	84.0	78.0	8800
	1185	N6810	38.3	228	3578	90	200	95.6	95.6	94.5	85.5	83.5	75.5	10900
	890	N7808	40.0	220	4764	80	200	95.5	95.5	94.5	82.0	79.0	70.5	15200
	710	N8810	41.4	205	5972	80	200	95.2	95.2	94.2	79.5	76.5	67.5	29800
900	1782	N6810	42.6	275	2677	90	200	95.6	95.2	94.0	86.5	84.5	78.5	8700
	1188	N6810	43.1	255	4015	90	200	95.7	95.5	94.5	85.5	83.5	75.5	10800
	892	N7808	45.0	245	5347	80	200	95.5	95.5	94.5	82.0	79.0	70.5	15000
	710	N8810	46.5	230	6718	80	200	95.3	95.3	94.3	79.5	76.5	67.5	29600
1000	1785	N6810	47.3	305	2969	90	200	95.7	95.5	94.5	86.5	84.5	78.5	8400
	1188	N7808	47.6	285	4461	90	200	95.7	95.5	94.5	86.0	84.0	76.0	12700
	892	N7808	49.6	270	5941	80	200	95.6	95.6	94.6	82.5	79.5	71.0	14800
	712	N8810	51.3	255	7443	80	200	95.5	95.5	94.5	80.0	77.0	68.0	29400
1250	1785	N7808	58.1	375	3711	80	200	95.8	95.5	94.5	88.0	86.5	82.5	(4)
	1190	N7808	59.4	355	5567	80	200	95.8	95.8	94.8	86.0	84.0	76.0	12600
	892	N8810	61.6	335	7427	80	200	95.8	95.6	94.6	83.0	80.0	72.5	25600
1500	1786	N7808	69.5	450	4451	80	200	96.2	96.0	95.0	88.5	87.0	83.0	(4)
	1190	N8810	70.7	420	6680	80	200	96.2	96.0	95.0	87.5	85.5	78.0	21900
	892	N8810	73.7	400	8912	70	200	96.0	95.8	94.7	83.0	80.0	72.5	25200
1750	1786	N8810	80.5	520	5193	80	200	96.2	96.0	95.0	88.5	87.0	83.0	(4)
	1192	N8810	81.4	485	7781	80	200	96.2	96.0	95.0	87.5	85.5	78.0	21600
2000	1787	N8810	91.9	595	5931	80	200	96.3	96.0	95.0	88.5	87.0	83.0	(4)

M152315

Note: 1. Above data are typical values and for reference only.
2. Test method: Performace test per IEEE standard 112 method F1
3. Only for high thrust motors. The allowable maximum down thrust is based on 5 years L-10 bearing life.
4. High thrust motor is available on request.
5. Non-reverse ratchet mechanism is available on request for high thrust motors.

ALL DATA ARE SUBJECT TO CHANGE WITHOUT PRIOR NOTICE.

STANDARD VERTICAL MOTOR OUTLINE DRAWING AND DIMENSION SHEET

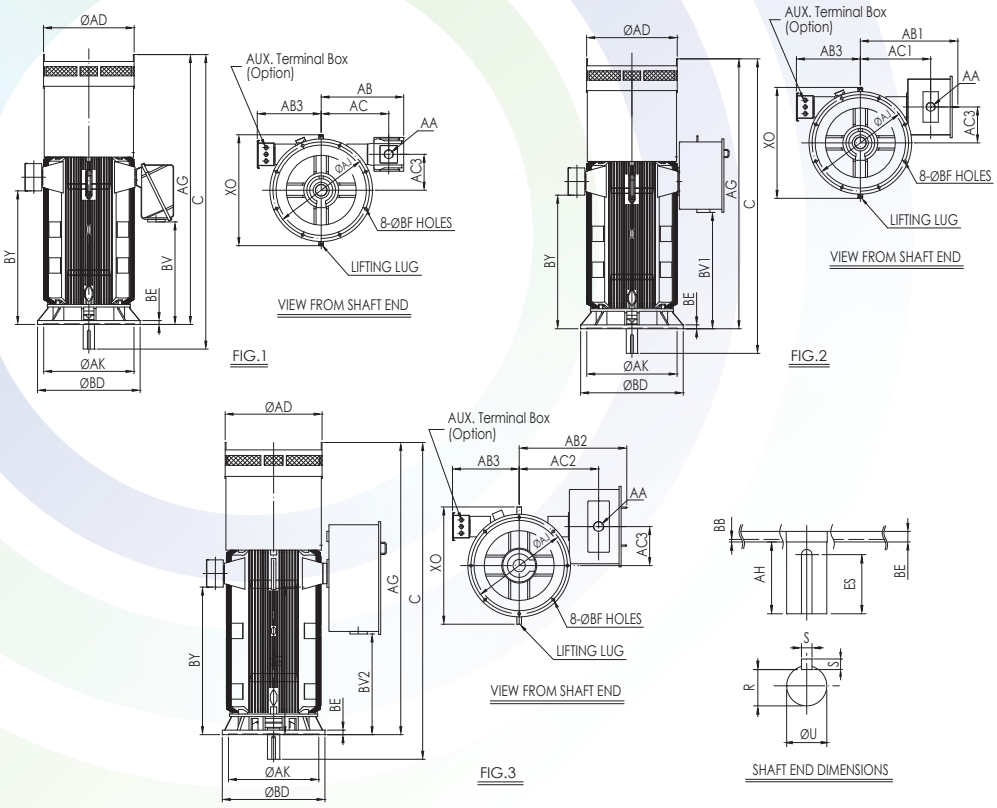

Unit : inch

FRAME NO.	POLES	FIG NO. 7)	FLANGE						AA	AB 7)	AB1 7)	AB2 7)	AB3	AC 7)	AC1 7)	AC2 7)	AC3	AD	AG
			AJ	AK	BB	BD	BE	BF											
N5009	4 ~ 10	1 or 2	29.13	26.772	0.23	31.50	0.98	0.95	NPT4"	29.65	34.65	−−	20.04	22.64	25.47	−−	10.83	28.35	75.98
N5810	4 ~ 10	1 or 2	37.01	34.646	0.23	39.37	1.38	1.10	NPT4"	31.06	35.31	−−	22.83	25.31	26.38	−−	11.61	31.10	88.19
N6310	4 ~ 10	1 or 2 or 3	37.01	34.646	0.23	39.37	1.50	1.10	NPT4"	33.07	36.61	40.08	23.39	26.06	27.44	37.76	13.78	35.04	96.85
N6810	4 ~ 10	2 or 3	37.01	34.646	0.23	39.37	1.50	1.10	NPT4"	−−	38.58	41.26	25.59	−−	28.62	38.94	14.96	36.61	105.51
N7808	4 ~ 10	2 or 3	42.52	39.37	0.23	45.28	1.97	1.10	NPT4"	−−	41.06	52.05	26.54	−−	31.89	40.91	16.93	40.94	114.17
N8810	4 ~ 10	2 or 3	42.52	39.37	0.23	45.28	1.97	1.10	NPT4"	−−	42.72	55.00	29.49	−−	33.54	43.86	18.50	45.28	113.39

FRAME NO.	POLES	FIG NO. 7)	BV 7)	BV1 7)	BV2 7)	BY	C	XO	SHAFT END					BEARING		APPROX. WEIGHT (lb)
									AH	ES	S	U	R	D.E. 6)	N.D.E. 6)	
N5009	4 ~ 10	1 or 2	22.52	28.07	−−	35.31	82.68	35.47	6.70	5.50	0.875	3.75	3.261	6220C3	6320C3	4409
N5810	4 ~ 10	1 or 2	33.15	38.67	−−	45.91	96.46	38.58	8.27	7.09	1.00	4.375	3.817	6224C3	7320B +6220C3	7055
N6310	4 ~ 10	1 or 2 or 3	34.72	44.88	33.26	51.26	105.12	42.56	8.27	7.09	1.00	4.375	3.817	6224C3	7324B +6224C3	10582
N6810	4 ~ 10	2 or 3	−−	50.24	38.62	56.61	113.78	45.00	8.27	7.09	1.25	4.75	4.041	6226C3	7324B +6224C3	11684
N7808	4 ~ 10	2 or 3	−−	47.48	24.96	59.57	124.01	49.29	9.84	8.66	1.25	5.00	4.296	6228C3	7324B +6224C3	16100
N8810	4 ~ 10	2 or 3	−−	51.81	29.29	63.90	125.2	53.54	11.81	9.84	1.50	6.30	5.459	6034C3	7330B +6230C3	20700

D34-17811

Note:
1) Diameter U tolerance : + 0.00 inch ~ − 0.001 inch.
2) Dimension R tolerance : + 0.00 inch ~ − 0.015 inch.
3) Dimension AK tolerance : + 0.004 inch ~ + 0.00 inch for N5009.
+ 0.005 inch ~ + 0.00 inch for N5810 ~ N8810.
4) Dimensions C, AB, AB1, AB2, AB3, AD, AG, BD, BV, BV1, BV2, BY, XO are approximate values.
5) Dimension C may be extended to meet low noise level.
6) Grease lubricated.
7) Fig. 1 for 4160 volts and below for N5009, N5810 and N6310.
Fig. 2 for 6600 volts for all frames and for 4160 volts and below for N6810, N7808 and N8810.
Fig. 3 for 11000 volts for N6310, N6810, N7808 and N8810.

HIGH THRUST VERTICAL MOTOR OUTLINE DRAWING AND DIMENSION SHEET

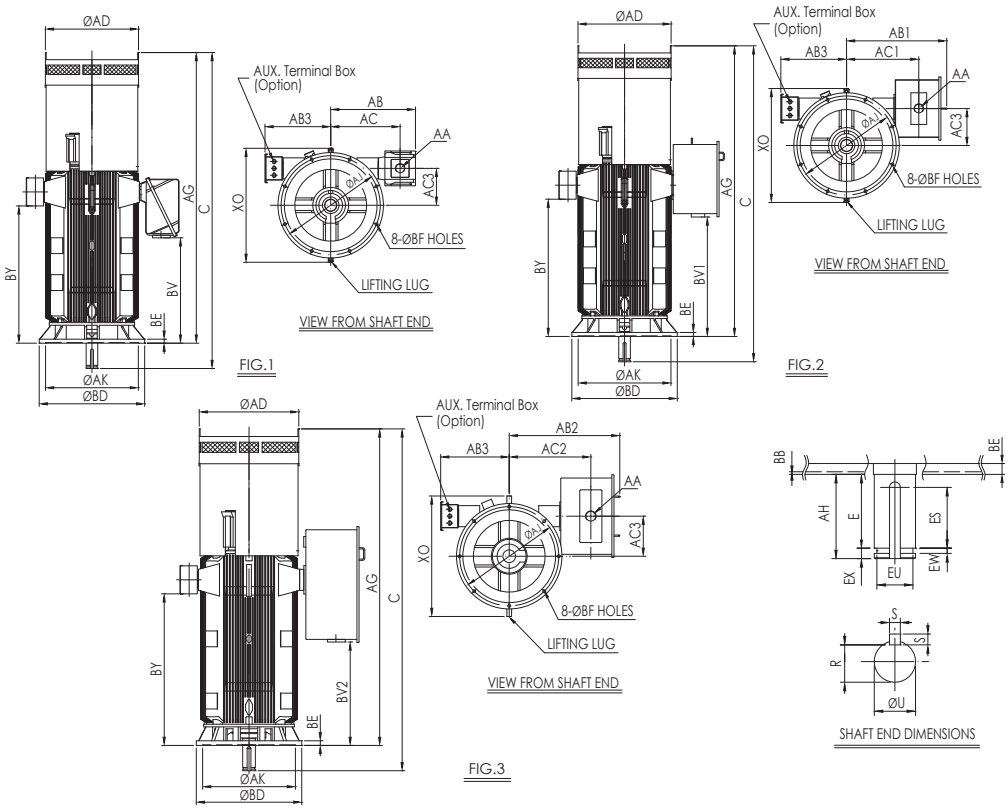

Unit : inch

FRAME NO.	POLES	FIG NO. 9)	FLANGE						AA	AB 9)	AB1 9)	AB2 9)	AB3	AC 9)	AC1 9)	AC2 9)	AC3	AD	AG
			AJ	AK	BB	BD	BE	BF											
N5009	4 ~ 10	1 or 2	29.13	26.772	0.23	31.50	0.98	0.95	NPT4"	29.65	34.65	– –	20.04	22.64	25.47	– –	10.83	28.35	81.34
N5810	4 ~ 10	1 or 2	37.01	34.646	0.23	39.37	1.38	1.10	NPT4"	31.06	35.31	– –	22.83	25.31	26.38	– –	11.61	31.10	93.31
N6310	4 ~ 10	1 or 2 or 3	37.01	34.646	0.23	39.37	1.50	1.10	NPT4"	33.07	36.61	40.08	23.39	26.06	27.44	37.76	13.78	35.04	103.54
N6810	4 ~ 10	2 or 3	37.01	34.646	0.23	39.37	1.50	1.10	NPT4"	– –	38.58	41.26	25.59	– –	28.62	38.94	14.96	36.61	112.20
N7808	6 ~ 10	2 or 3	42.52	39.37	0.23	45.28	1.97	1.10	NPT4"	– –	41.06	52.05	26.54	– –	31.89	40.91	16.93	40.94	120.87
N8810	6 ~ 10	2 or 3	42.52	39.37	0.23	45.28	1.97	1.10	NPT4"	– –	42.72	55.00	29.49	– –	33.54	43.86	18.50	45.28	120.08

FRAME NO.	POLES	FIG NO. 9)	BV 9)	BV1 9)	BV2 9)	BY	C	XO	SHAFT END									BEARING		APPROX. WEIGHT (lb)
									AH	E	ES	EU	EW	EX	S	U	R	D.E.	N.D.E. 8)	
N5009	4 ~ 10	1 or 2	22.52	28.07	– –	35.31	89.04	35.47	7.7	6.70	5.50	3.27	0.50	1.0	0.875	3.75	3.261	6220C3 7)	29330+ 6028	5070
N5810	4 ~ 10	1 or 2	33.15	38.67	– –	45.91	102.58	38.58	9.27	8.27	7.09	3.875	0.50	1.0	1.00	4.375	3.817	6224C3 7)	29330+ 6028	7275
N6310	4 ~ 10	1 or 2 or 3	34.72	44.88	33.26	51.26	112.81	42.56	9.27	8.27	7.09	3.875	0.50	1.0	1.00	4.375	3.817	6224C3 7)	29330+ 6028	11023
N6810	4 ~ 10	2 or 3	– –	50.24	38.62	56.61	121.97	45.00	9.77	8.27	7.09	4.00	0.75	1.5	1.25	4.75	4.041	6226C3 8)	29330+ 6028	12786
N7808	6 ~ 10	2 or 3	– –	47.48	24.96	59.57	132.21	49.29	11.34	9.84	8.66	4.25	0.75	1.5	1.25	5.00	4.296	6228C3 8)	29334+ 6032	17160
N8810	6 ~ 10	2 or 3	– –	51.81	29.29	63.90	133.39	53.54	13.31	11.81	9.84	5.55	0.75	1.5	1.50	6.30	5.459	6034C3 8)	29340+ 6038	22000

D34-17810

Note:
1) Diameter U tolerance : + 0.00 inch ~ − 0.001 inch.
2) Dimension R tolerance : + 0.00 inch ~ − 0.015 inch.
3) Diameter EU tolerance : + 0.00 inch ~ − 0.010 inch for N5009 ~ N6310.
+ 0.00 inch ~ − 0.015 inch for N6810 ~ N8810.
4) Dimension AK tolerance : + 0.004 inch ~ + 0.00 inch for N5009.
+ 0.005 inch ~ + 0.00 inch for N5810 ~ N8810.
5) Dimensions C, AB, AB1, AB2, AB3, AD, AG, BD, BV, BV1, BV2, BY, XO are approximate values.
6) Dimension C may be extended to meet low noise level.
7) Grease lubricated.
8) Oil lubricated.
9) Fig. 1 for 4160 volts and below for N5009, N5810 and N6310.
Fig. 2 for 6600 volts for all frames and for 4160 volts and below for N6810, N7808 and N8810.
Fig. 3 for 11000 volts for N6310, N6810, N7808 and N8810.

TATUNG

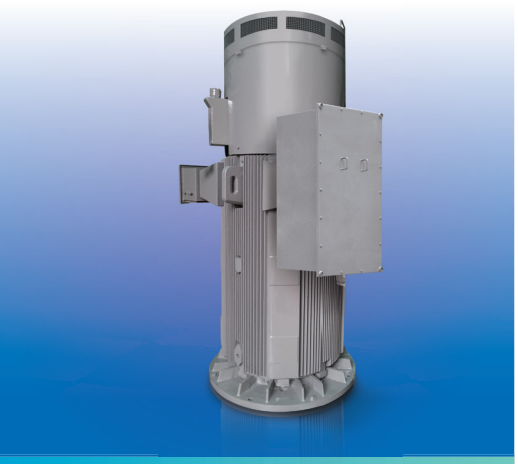

Contact Information

TATUNG Company
22 Chungshan N. Road, 3rd Sec.
Taipei, 10435 Taiwan
Tel: 886-2-2599-5429,
886-2-2592-5252
ext.2403, 2489, 2908
Fax: 886-2-2598-4427
E-mail:
service@sansha.tatung.com.tw
Web: www.tatung.com

TATUNG (Shanghai) Co., Ltd.
No. 5299 Beisong Road, Chedun Town
Songjiang District, Shanghai 201611,
China
Tel: 86-21-57605299 ext. 206, 288
Fax: 86-21-57605266
Email: export@tatungsh.net
Web: www.tatungsh.com

TATUNG Electric Company of America, Inc.
14381 Chambers Road, Tustin, CA
92780
Tel: 1-714-8383293
Fax: 1-714-8383295
E-mail: sales@tatungelectric.com
Toll Free 1-800-828-8641
Web: www.tatungelectric.com



TATUNG Sanhsia Motor Factory Facts

TATUNG Company Founded in 1918
Sanhsia Factory Land Area — 1,800,000 ft²
Total MV Motors Produced — over 30,000
Continuous Production since 1949
Voltage Range — thru 13,800 Volts
Test Facility through 50,000HP — IEC 60034-2-1 or
IEEE 112 Method F1
Location — 352 Shi-tong Rd., Sanhsia, New Taipei City 23743,
Taiwan